INSTITUTE OF CORROSION

MARINE CORROSION FORUM

FOR ALL WET CORROSION ISSUES

Welcome to MCF – Marine Corrosion Forum / ICorr – Institute of Corrosion 2020 Summer Webinars.

INSTITUTE OF CORROSION

MARINE CORROSION FORUM

FOR ALL WET CORROSION ISSUES

Institute of Corrosion partnering with

Andrew Woodward and Christopher Matthews

of Connector Subsea Solutions Ltd.

10th July 2020

“Use Of CRA’s in Mechanical Connectors for CRA Clad or Lined pipe repairs”

Andrew Woodward and Christopher Matthews

10th July 2020

About Us

- Andrew Woodward
- Andrew has a BEng and an MSc in Mechanical Engineering from Aston University. Andrew has over 10 years experience in Technical Sales and Estimation in Specialist Applications and joined the MORGRIP team in 2016. Andrew is now the Market Manager for Subsea Products including MORGRIP at Connector Subsea Solutions.

- Chris Matthews
- Chris joined the MORGRIP team in 2014 shortly after finishing a BEng in Aerospace Systems Engineering at Coventry University. After short period working with standard products Chris was engaged in a high profile project for Mechanical Connectors for Deep Water Repairs which lasted 2 years. After that Chris was a leading figure on the engineering team developing the new MORGRIP CLiP Connectors which are the subject of today's presentation.

CONNECTOR
SUBSEA SOLUTIONS

Use Of CRA's in mechanical connectors for CRA Clad or Lined pipe repairs

Andrew Woodward

Chris Matthews

10 July 2020 12:00-13:00 (BST)

What we will cover

- Introduction to CSS
- Overview of CSS – what we do
- Mechanical Connectors - a brief introduction
- Clad & Lined Pipe – The Challenge
- CLiP Connector Introduction
- DNVGL Technology Qualification Process
- Corrosion Risks Considered
- Material Analysis
- Testing
- Summary & Next Steps

Connector Subsea Solutions

CONNECTOR SUBSEA SOLUTIONS

Who are we

- Founded in year 2000
- HQ in Norway, branch offices in UK, Croatia, Bosnia, Brazil
- 60+ Employees dedicated towards pipeline repair solutions

Complete Subsea Repair Solutions

- MORGRIP Pipeline Repair Connectors & Clamps
- Connector & Clamp Installation Frames & Tooling
- Pipe Lifting & Handling, Coating Removal, Pipe Cutting, Pipe-Prep, etc
- Lightweight, Robust, ROV friendly, Unique

Connector Subsea Solutions

CONNECTOR SUBSEA SOLUTIONS

Complete Subsea Distribution Solutions

- Hydraulic Couplers, MQC, Gas lift & Chem. Injection Connectors,
- HFL, Ball Valves – High Flow, small footprint

New to CSS

- Acquisition of Isotek for Remote Welding Technologies

Track Record

- DW World First: Riser Repair, Horizontal Repairs, Coating Removal
- Highest Pressures: 10 000psi/ 690 barg - Clamps & Connectors
- Equipment used successfully in 1000+ deepwater operations

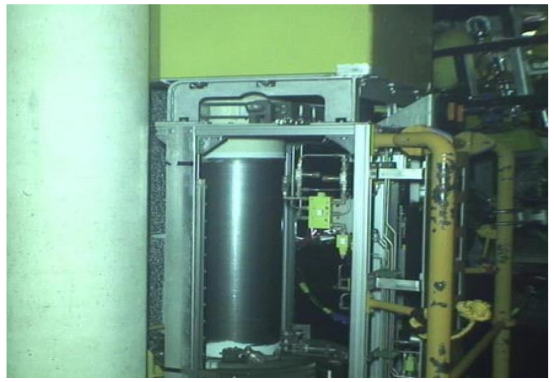

Mechanical Connectors

A definition:

A Mechanical Connector provides a safe, reliable, reversible means of affecting a mechanical connection between two bare pipe ends equivalent to a good welded connection.

A Connector should:

- Provide containment to suit line media and application pressure
- Gripping capacity to suit pressures and external loads

MORGRIP Connectors - 30 years and 3000 connections topside, subsea and deep water

CSS Acquired MORGRIP Connectors in 2019 after 5 years of successful project collaborations

Typical Use

Can be used Topside or Subsea, with or without divers for installation. Typical uses:

- Pipeline Repairs – Planned or Emergency
- Piping System Modifications
- Life of Field Extension – Tie-ins etc
- Decommissioning – rerouting pipelines to decommission platforms

Wherever a pipe end needs to be cut to effect a new connection this type of mechanical connector solution is applicable.

How it works

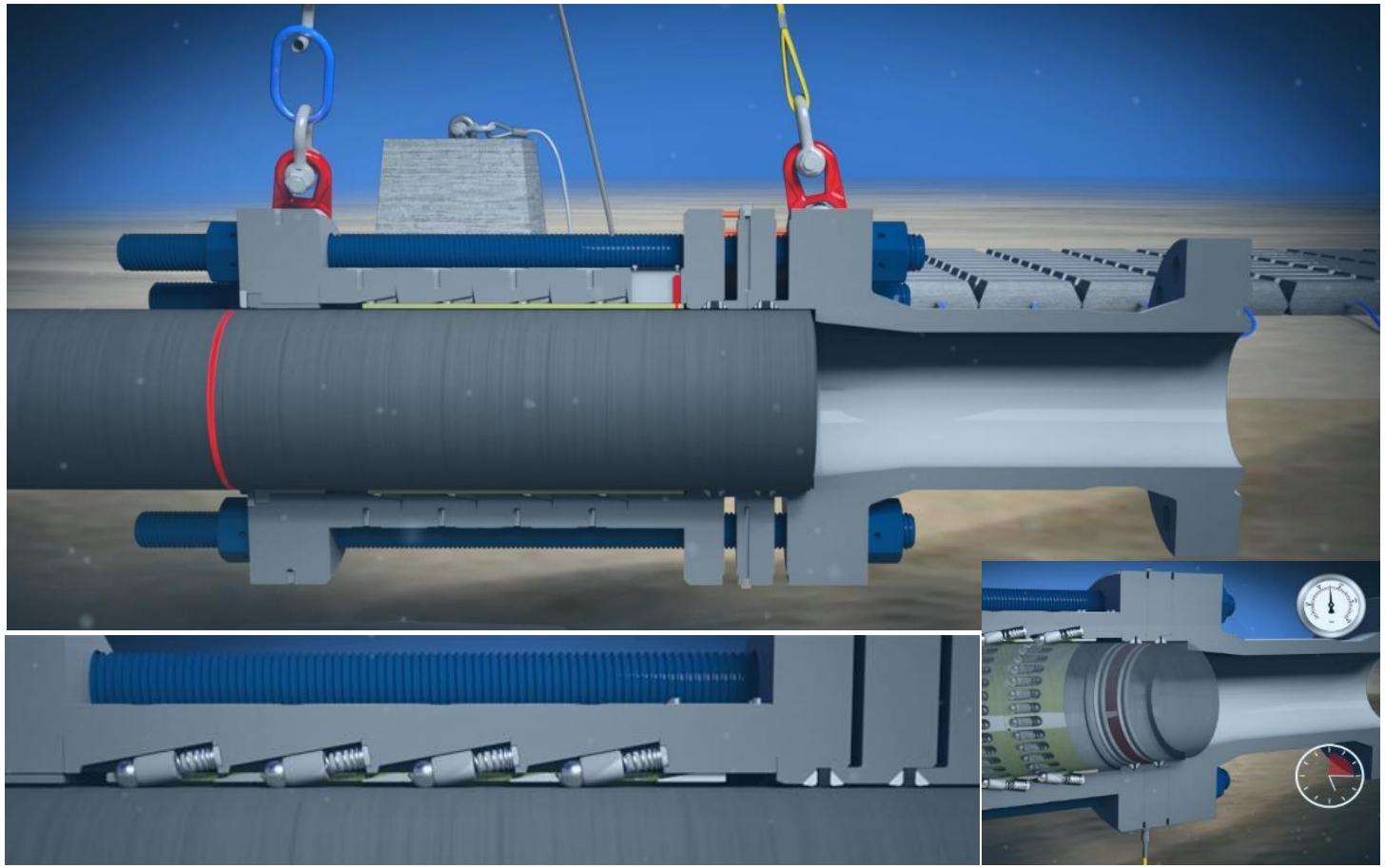

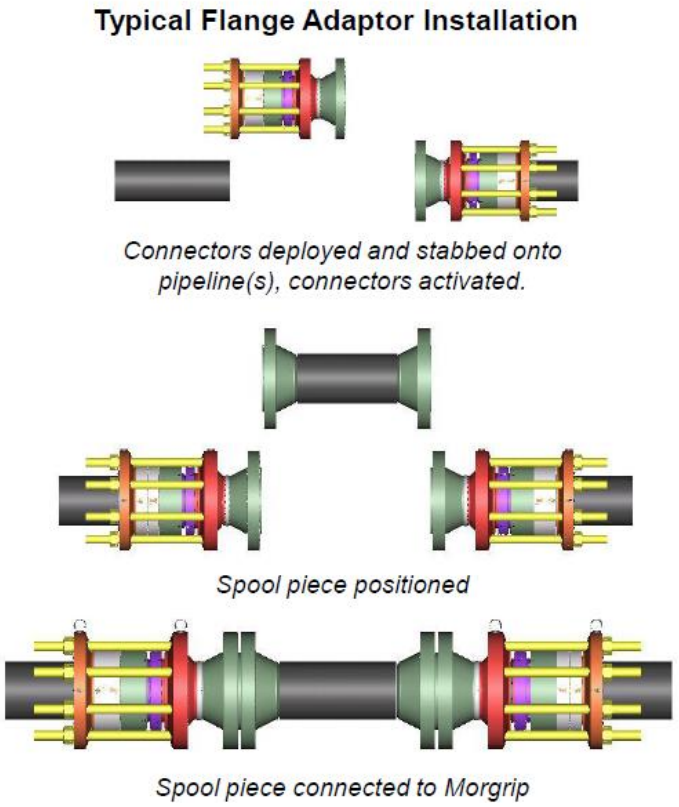

Corrosion Mechanisms

CONNECTOR SUBSEA SOLUTIONS

Subsea Coating (eg NORSOK)

Bolting PTFE coated if required

Anodes Optional

Materials compatible with pipeline (Carbon/ Stainless/ Duplex Steels)

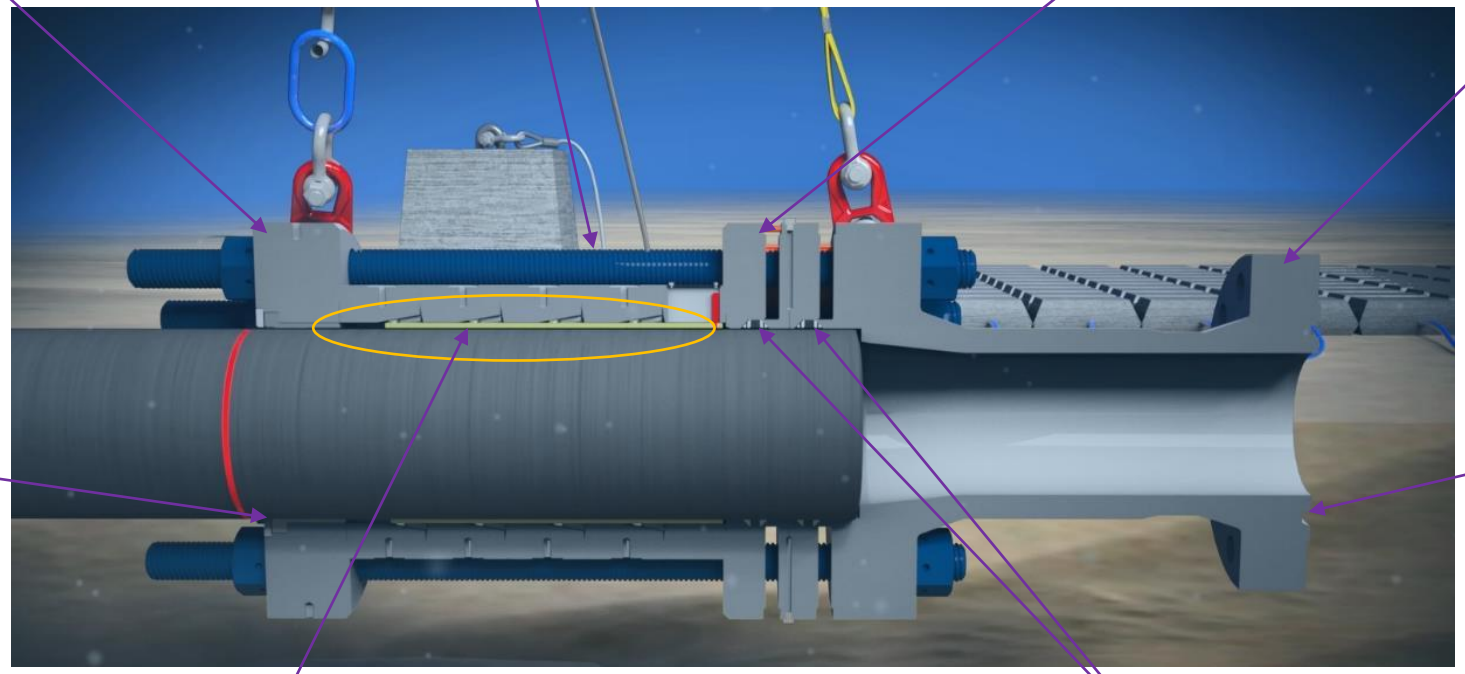

Barrier seal – prevents replenishment of seawater

CRA Cladding Optional

Full metal to metal contact – pipeline CP protects connector

Dual Graphite/Metal Pressure Containing Seals

Clad & Lined Pipe – The Challenge

CONNECTOR SUBSEA SOLUTIONS

Clad & Lined Pipes are made of a parent pipe and an internal CRA barrier

- Used for pipelines containing aggressive line media – High H_2S content
- Cutting the pipe exposes the new pipe end to line media
- Parent metal and CRA interface is susceptible to corrosion

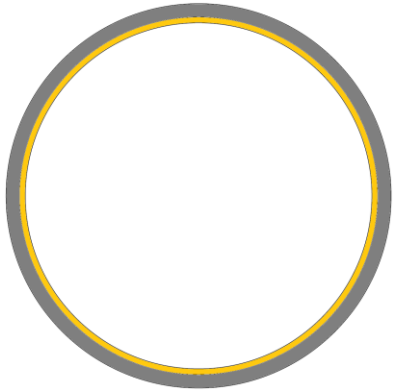

Welding repair options need:

- Hyperbaric chambers & divers/remote systems
- Complex weld qualifications with dissimilar metals
- Limited availability of equipment and competence
- High price

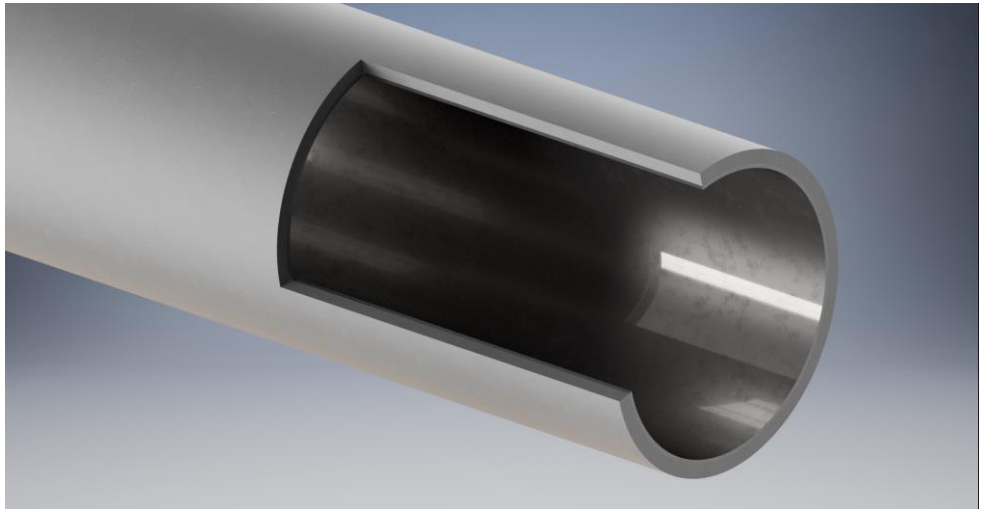

Clad & Lined Pipe – The Challenge

Conventional repair connectors seal on outside of pipe only.

Typical conventional connector seal arrangement:

Any solution should:

- Be suitable for pigging operations
- Protect the exposed pipe end from line media
- Be resistant to line media for life of asset

Risk of HIC and HISC to be mitigated

Introduction to the CLiP Connector

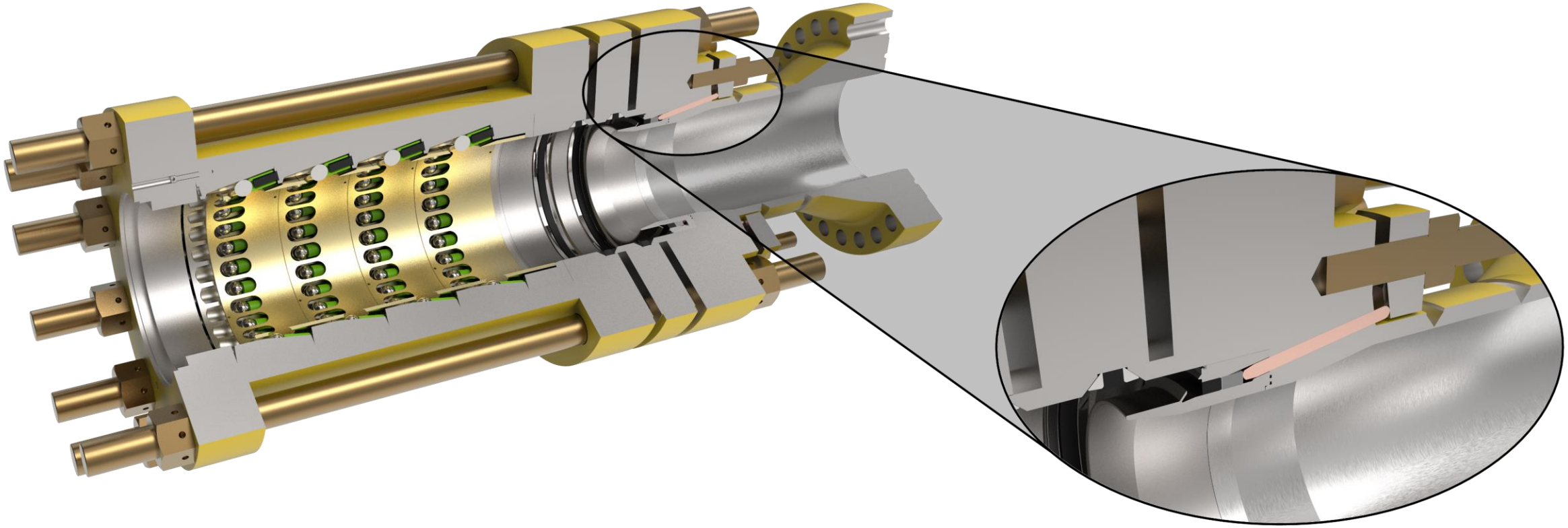

DNVGL Technology Qualification

- The CLiP connector seal was developed in accordance with Technology Qualification DNVGL-RP-A203.
- Regular technical reviews carried out internally, and with DNVGL.
- Process was completed at launch in December 2019.

DNV-GL TQ Process	
Phase 1	**QUALIFICATION BASIS** *Set the requirements*
	TECHNOLOGY ASSESSMENT *Novelty and show-stoppers*
Phase 2	**THREAT ASSESSMENT** *Failure modes and risks*
	QUALIFICATION PLAN *Select qualification methods*
Phase 3	**EXECUTION OF PLAN** *Collect evidence*
	PERFORMANCE ASSESSMENT *Compare with requirements*
Launch	**NPD LAUNCH DOCUMENTATION**

Primary Design Features

- ‘Finned Insert’ & ‘Nose’, Create a closed volume for the graphite to fill in to. The Fin is designed to be deformed plastically as the pipe is pushed into the connector, remaining in contact with the entire circumference of the pipeline inner diameter. The nose is sized to allow for a skew angle cut of the pipe.
- ‘Seal Activation Ring’ & ‘Pins’ push the graphite into the closed volume after the connector has been gripped onto the pipe.

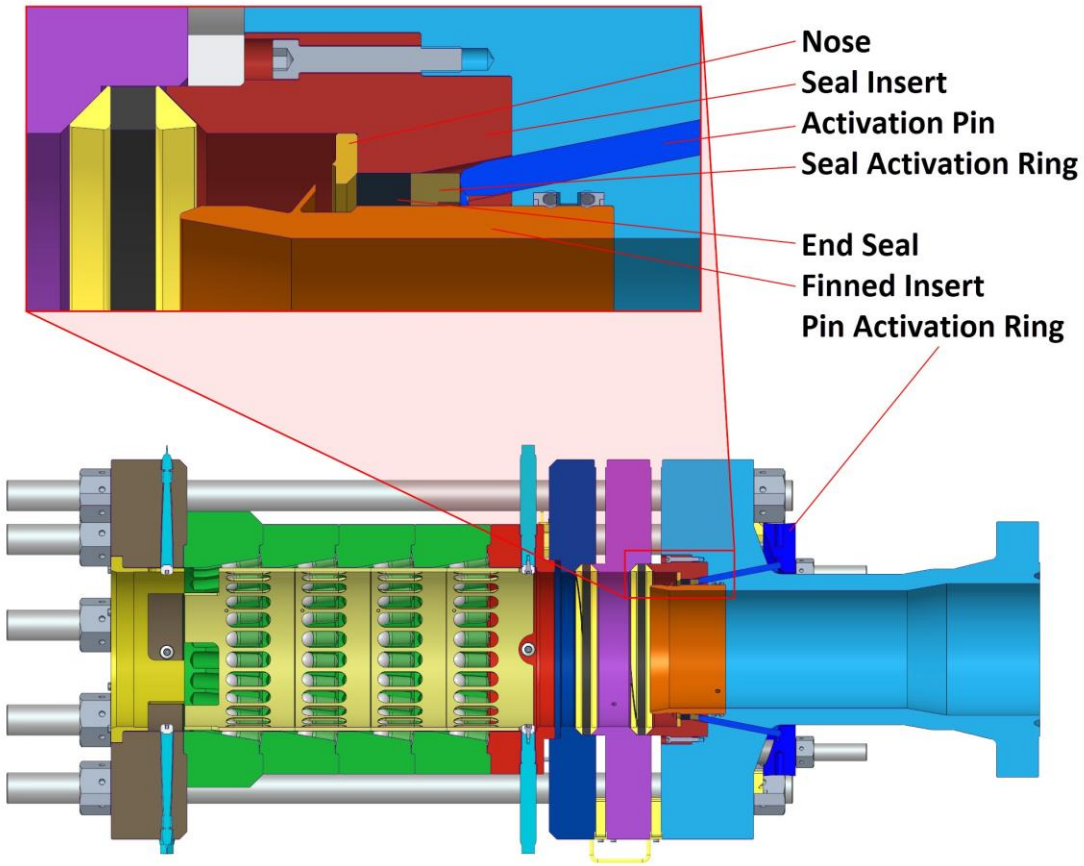

Introduction to the CLiP Connector

CONNECTOR SUBSEA SOLUTIONS

Graphite End Seal Summary:

- A primary seal is created against the inner diameter of the pipe liner.
- Existing knowledge from the graphite is used behind the AER (also known as the 'fin').
- ID intrusion into the pipe is limited to ensure that any effects on ILI tool operations are minimized.
- The fin component is a single use item; so the end seal assembly is modular to ensure that changing out parts is made as simple as possible.

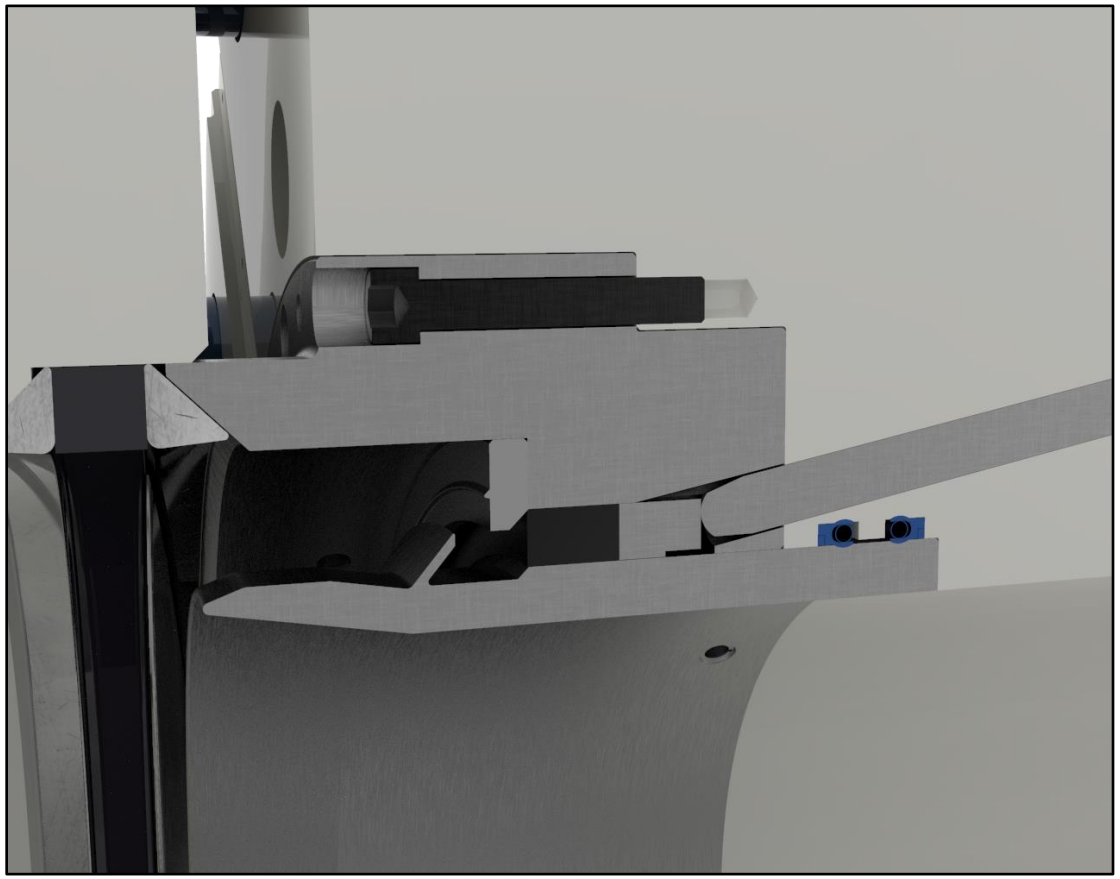

Corrosion Risks Mitigated

CONNECTOR SUBSEA SOLUTIONS

- Seal has been developed in accordance with sour service environmental and material limits outlined in NACE MR0175/ISO 15156-3.
- The seal accommodates any combination of H_2S, chloride concentration & pH in production environments, and is sulfur resistant at operating temperatures below 149°C.
- Cold working of the fin from the plastic deformation during pipe stab is kept within the 1034MPa yield strength limit stated in NACE MR0175/ISO 15156-3.
- Seals used on the back face of the end seal assembly are also suitable for the aforementioned environmental conditions.

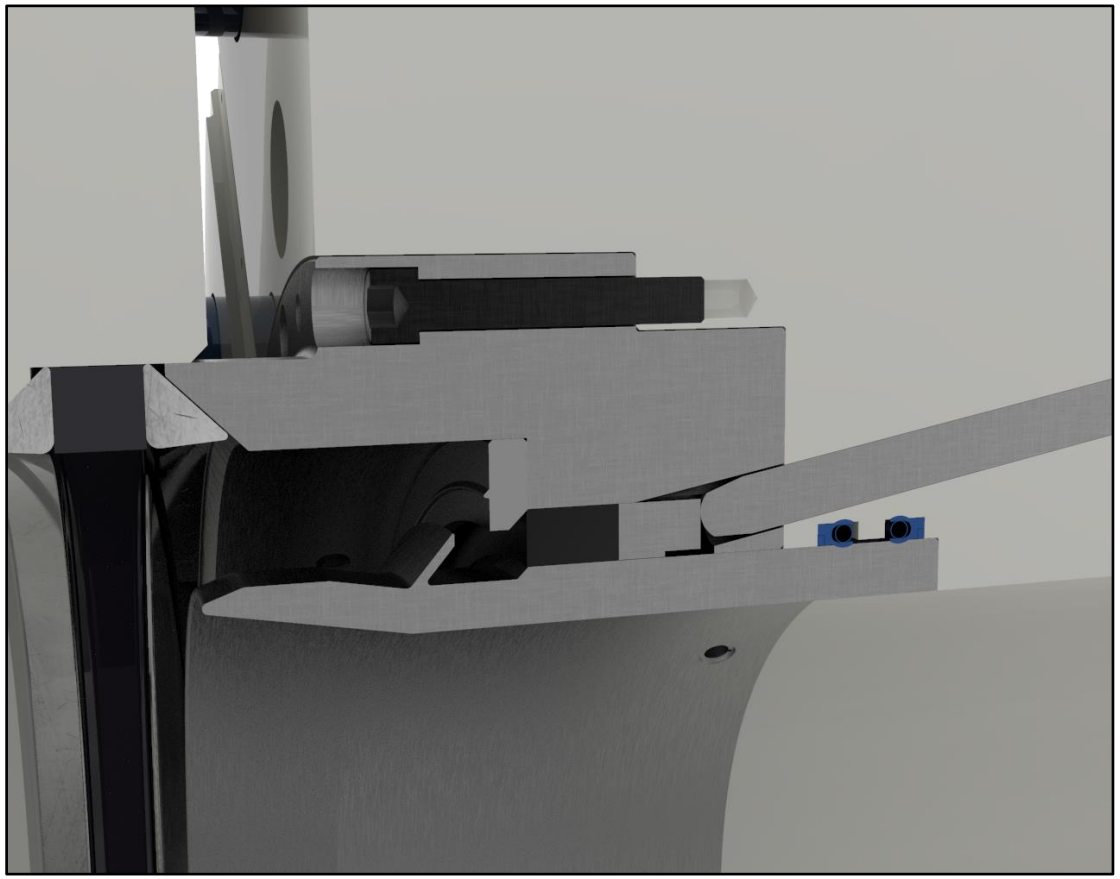

Fin Material Analysis

- Alloy 625 (UNS N06625) is used for the fin material with a high target temperature for heat treatment.
- The heat treatment target range maximises the ductility of the material, keeps the initial yield strength relatively low to allow for additional cold working, and keeps consistent strength properties between material batches.
- In order to accurately predict the material behavior during operation, a modified version of the Ramberg-Osgood relationship is used for all analyses.

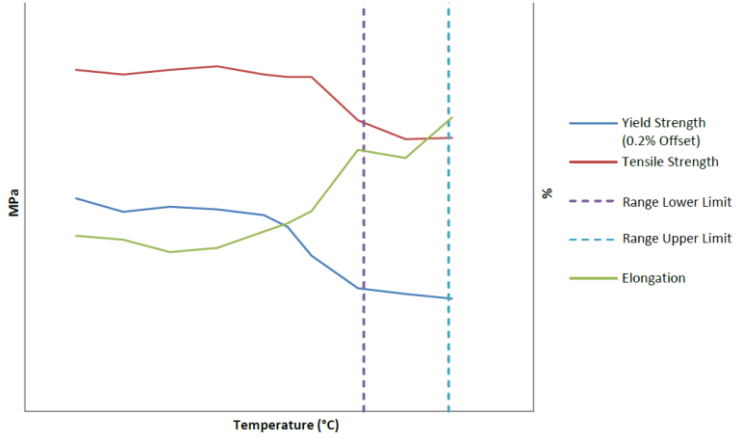

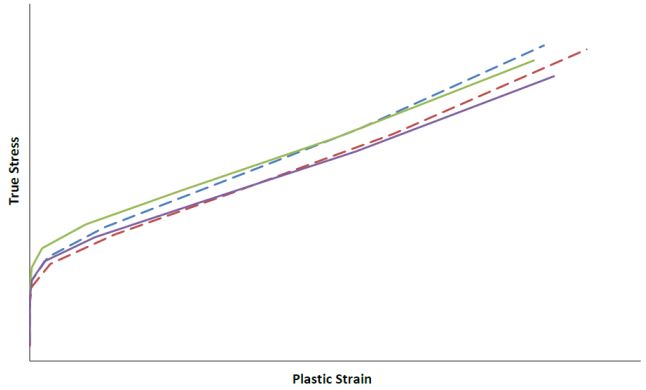

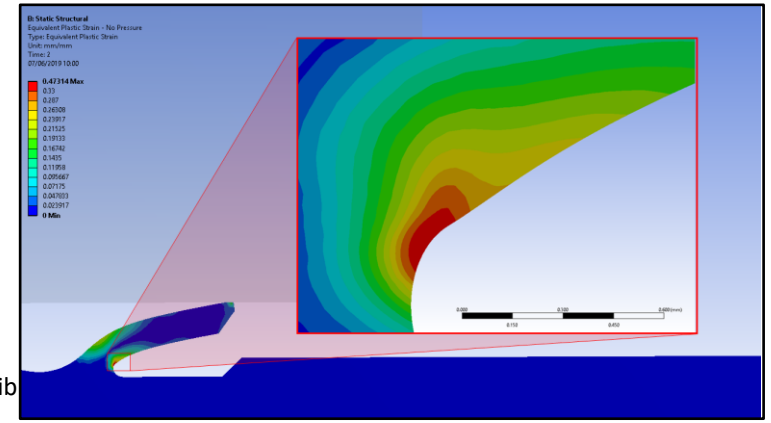

Mechanical Testing

- Stress-strain data generated from tensile testing of material samples shows good correlation between predicted curves and measured results.
- Measurements from a fin deformation test rig show that the mechanical behaviour of the material can be predicted with the existing assumptions.

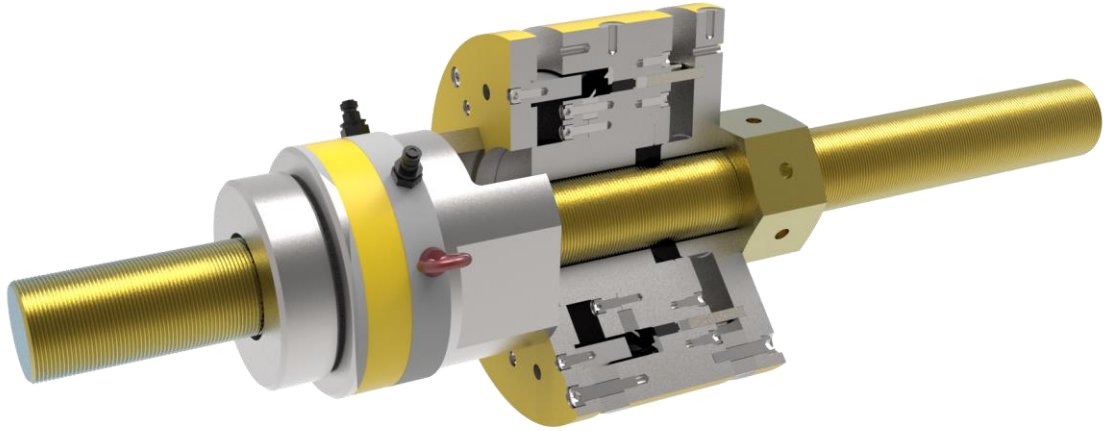

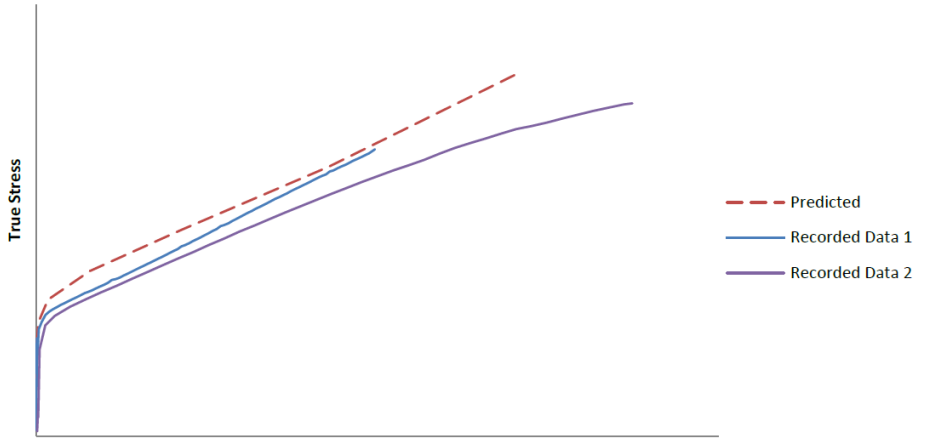

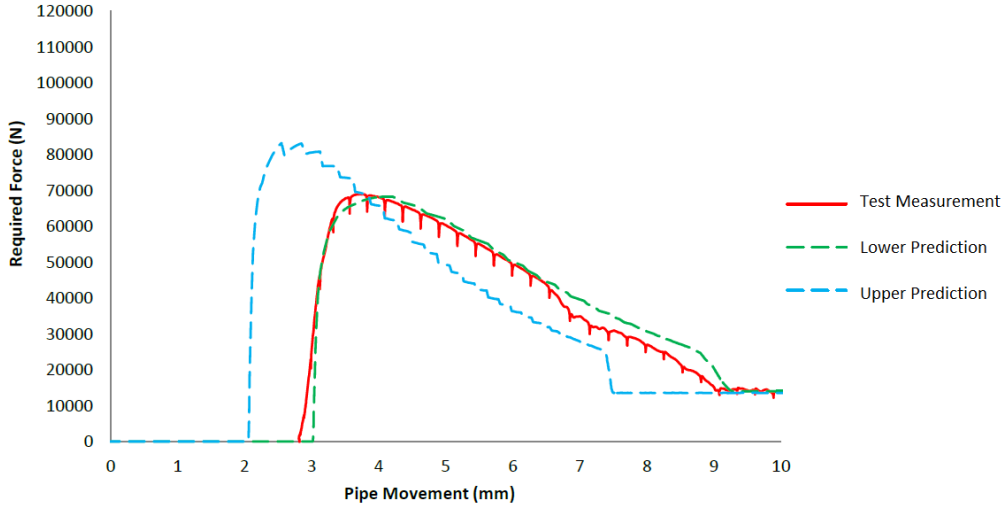

Mechanical Testing

Once the design rules were defined, their robustness was checked thorough deforming the fin under a wide range of pipeline tolerances, including an exaggerated internal weld seam.

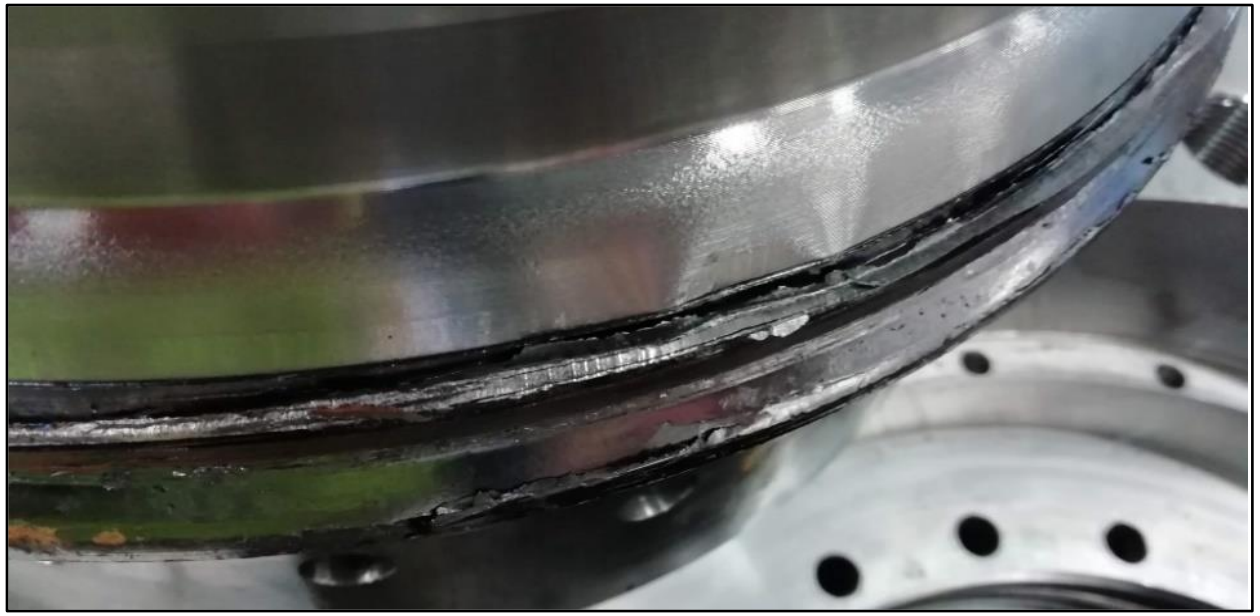

Corrosion Testing

Alloy 625 corrosion testing was carried out at Element Material Testing Lab.

The material was strained to the upper limit defined by the predicted material stress-strain curve in a 4 point bent test rig, then tested in an autoclave with the following environmental conditions:

- H_2S Partial Pressure - 200kPa
- Chloride Concentration - 100,000ppm
- pH - 3.39
- Sulfur Concentration - 1,000ppm
- Temperature - 149°C

No cracks were observed at 50x-1000x magnification on any specimen during the cross-sectional examination.

Seal Testing

- The graphite seal under the fin was designed using existing knowledge obtained through experience with the MORGRIP radial graphite seals.
- In order to ensure the seals integrity, the graphite is stressed to a required load and locked in at that point.
- All testing to date has shown that there is no seal extrusion past the fin or nose, and the graphite will completely fill any void it is forced in to.

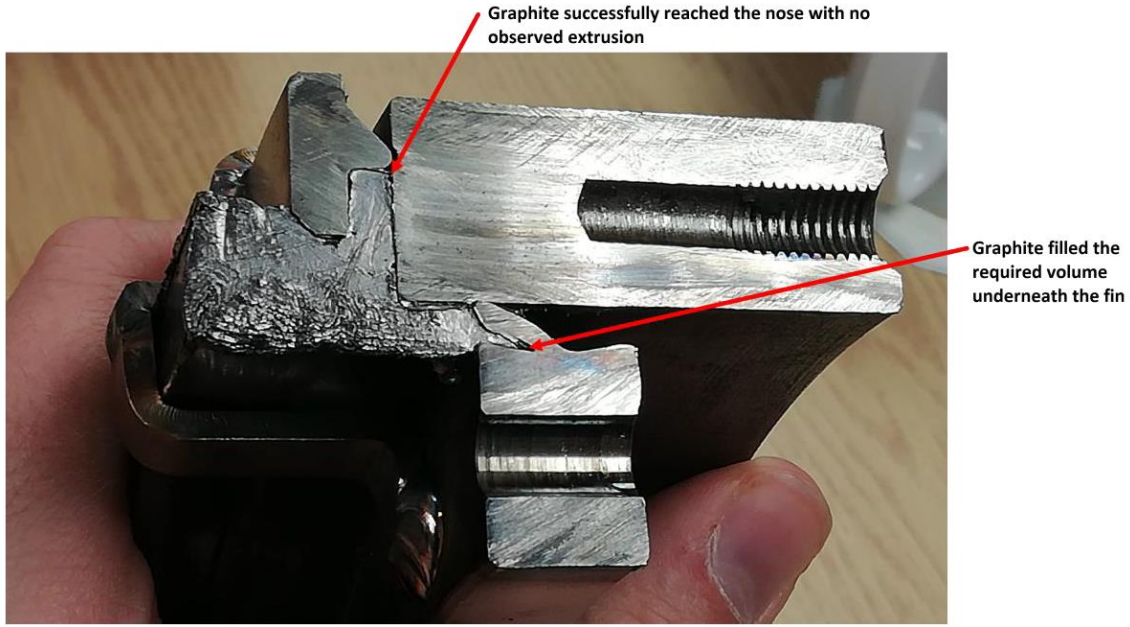

Connector Testing

All previous findings were collected and tested together in a 16” connector.

Tests completed included:

- External Seal Test
- Internal Hydrotest
- Internal Capacity Strength Test
- Compressive Strength Test

All tests were successful and lead to the award of the DNVGL Type Approval.

Summary

- Identified limitations of existing technology for the Clad & Lined Pipe application
- Designed a concept solution and presented to JIP partners and DNVGL
- Concept modelling verified with small scale testing & reviewed with stakeholders
- Plan for large scale testing developed and implemented, reviewed with stakeholders to obtain Type Approval
- Lessons learnt: Process was longer and more complex than first expected but ultimately delivered a robust solution

Next Steps

CONNECTOR SUBSEA SOLUTIONS

- Complete Emergency Pipeline Repair System (EPRS) proposals for JIP partners and agree implementation
- Offer to the wider market where operators have Clad & Lined Pipe
- Integrate into Diverless repair offering as required
- Finding the next Challenge!

THANK YOU FOR ATTENDING

This Webinar was brought to you by MCF working in partnership with ICorr and Connector Subsea Solutions Ltd